PRODUCT SPECIFICATION

30685
PEGASI FLOOR BATH MIXER SQUARE, MICRO

FEATURES
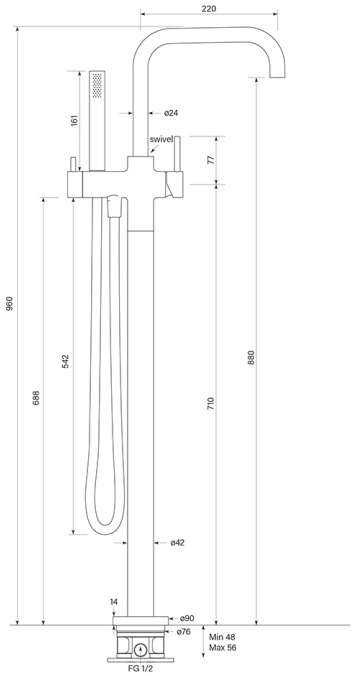
- Suits concrete or timber floor
- Rock solid mount
- Petite 90 mm round floor flange
- Free flow
- WELS 3* 9lpm (hand shower)
- Micro hand shower
- Swivel Spout reach 220 mm
- 2 stage flow step valve
- To upgrade to the No Pin Handle, order either 34380 smooth, or 34381 knurled handle along with this mixer and we will supply assembled